TEST PROJECT

Mechanical Engineering Design – CAD-Day3

ES18_T05_M1 _EN

Emirates Skills
مهارات الإمارات

TEST PROJECT – INDEXING MILLING FIXTURE

Task for Day 3:

Produce a 3D model of components and assemblies using the given 2D drawings.

Maximum Allowed Time:

5 hours

Given:

1. 2D drawings of components in the form of hardcopies.
2. Personal computer with Autodesk Inventor 2017 version installed.
3. A4, A3, A2 and A1 template in metric units.
4. Printer/Plotter “A4, A3, A2 and A1 size”.

Output:

1. Create new project named Sterling Engine.
2. 3D shaded drawing for each model and 2D drawings with all the necessary dimensions required to draw the solid models printed in one sheet (size A4, A3, A2 and A1).
3. 3D shaded assembly drawing of the whole parts with two selected 2D views to fully describe the assembly including the main dimensions of the assembled parts printable in one sheet (size A1).
4. Set a proper scale.
5. Select proper materials and colour for the different objects
6. Complete the title block for all the drawings
7. Create presentation file for the objects.
8. Create balloon and part list on the assembly drawing details.
9. All dimensions should be placed without decimal place.

Instructions:

1. Complete the title block for all the drawings.
2. Save your drawing on the folder named Day3 with the names indicated in the table below.
3. Chamfer 1x45° if missing.

4. Use the following parts to complete the assembly.

Item No.	Description	Quantity	Materials	Remark
1	Base	1	Yellow Pine- Solid Stained Light	
2	Body	1	Cadet Blue	
3	Piston Frame	2	Clear-Green1	
4	Connecting Rod	2	Chrome Polished Blue	
5	Handle	2	Copper-Polished	
6	Handle-support bolt	2	Steel	Given
7	Piston	2	Chestnut	
8	Piston Pin	2	Chrome Polished	
9	Straight Pin (Lower)	2	Chrome Polished	
10	Spindle	1	Chrome Polished	
11	Top Cover	1	Flaked Satin-Blue	
12	Paper	2	Brass-Satin	
13	Wheel	2	Chrome-Polished Blue	
14	Wheel- Straight-Pin	2	Chrome-Polished	
15	V-Bolt	12	Steel	Given
16	Hex. Bolt	8	Steel	Given
17	Washer	4	Steel	Given

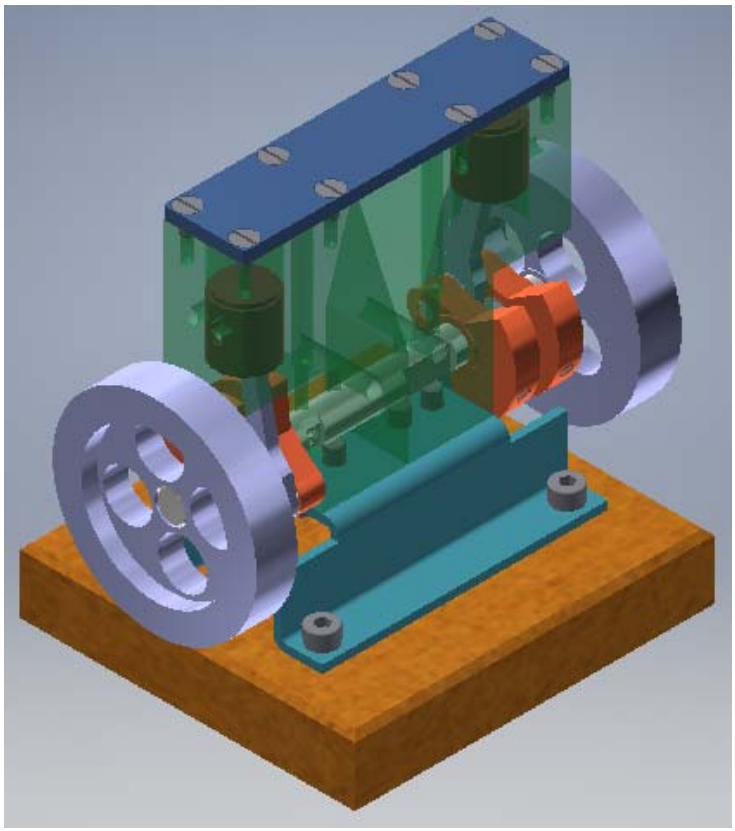

Assembly Parts